Short operating instructions WS 5425

Before washing

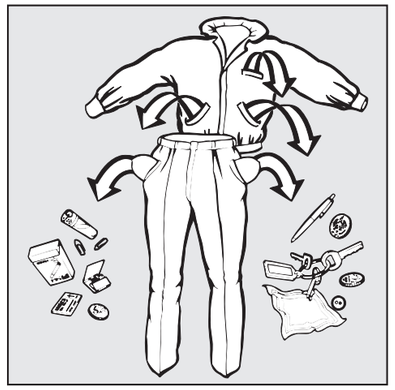

1. Sort the washing
Empty all pockets

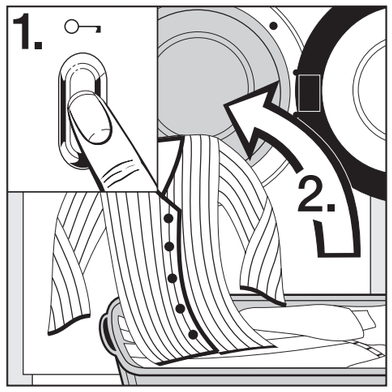

2.1 Open the door
2.2 Load the washing
2.3 Close the drum door

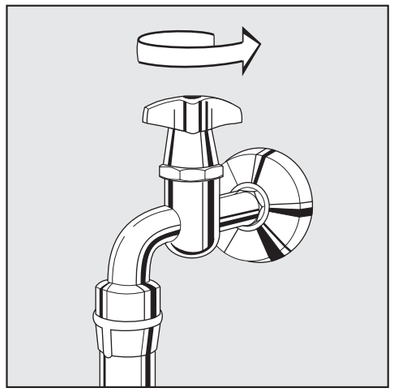

3. Turn on the stop-cock(s) (if not already on).

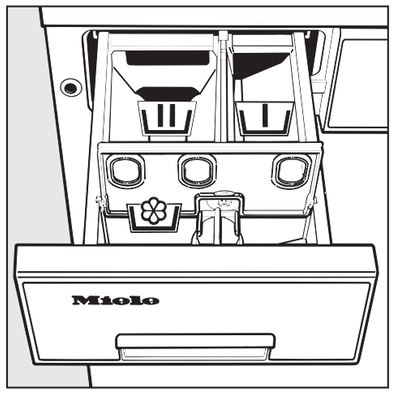

4. Add detergent
Pre-wash
Main wash
Fabric conditioner

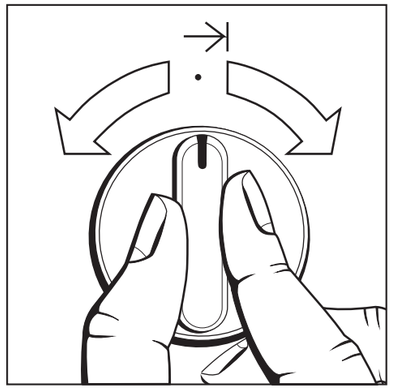

5. Select a programme, see chart.
Select additional function(s) as required

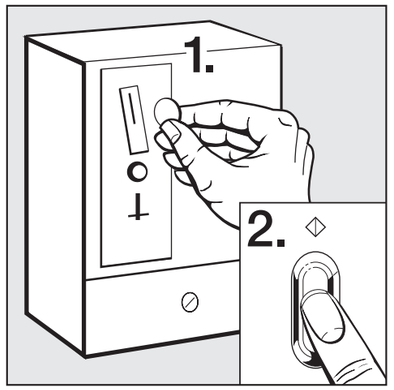

6.1 Coin box: (where fitted) insert coins or tokens
6.2 Start the programme

Programme * depending on model	Fabric	Max. load
Ⓐ **Cottons** 95 60 30	Cotton and linen fabrics e.g. bed and table linen, overalls, towels, jeans (Pre-wash possible. Press button.)	5 kg
Ⓑ **Minimum iron** 95 60 30	Synthetic fabrics Wash delicate textiles in the Delicates/Synthetics programme (Pre-wash possible. Press button.)	2.5 kg
Ⓒ **Delicates/ Synthetics** 30 40	Synthetic fabrics machine washable curtains (Pre-wash possible. Press button.)	1 kg
Ⓓ **Woollens**	Machine washable woollens	1,5 kg
Ⓔ* **40 °C Short programme**	For washing lightly soiled items made of cotton (Pre-wash possible. Press button.)	2.5 kg
Ⓕ* **Separate rinse**	e.g. after handwashing	4 kg
Ⓖ* **Separate spin**	e.g. for items previously handwashed	
Ⓗ* **Separate drain**	where a spin is not required.	

M.-Nr. 05 079 000

After washing

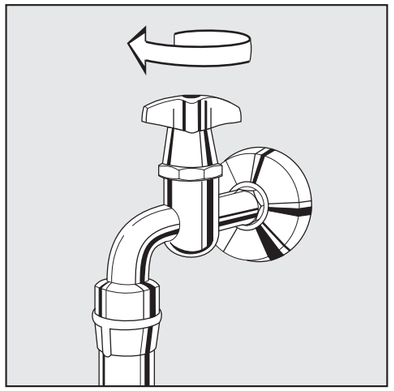

1. Turn off stopcock(s)

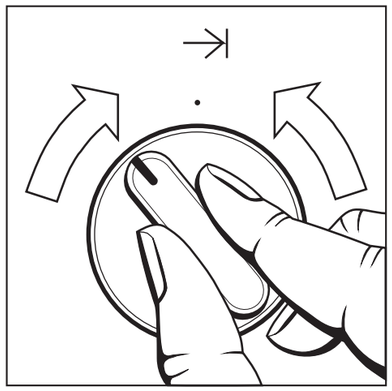

2. Turn programme selector to end position. Turn to "Drain" if programme was interrupted

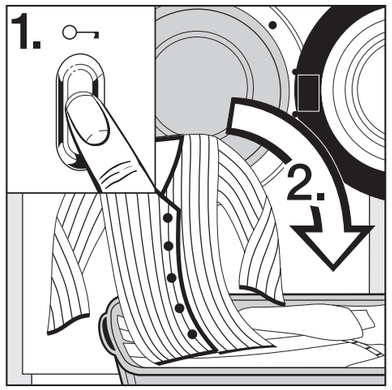

3. Open the drum door **CAUTION: Never reach into a moving drum** Remove washing

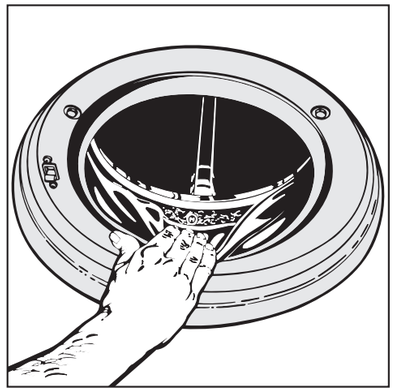

4. Check the sealing ring for buttons etc.

What to do if …

…the drain outlet is blocked

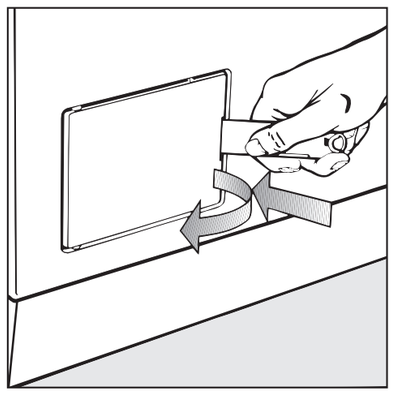

1. Open the drain access flap

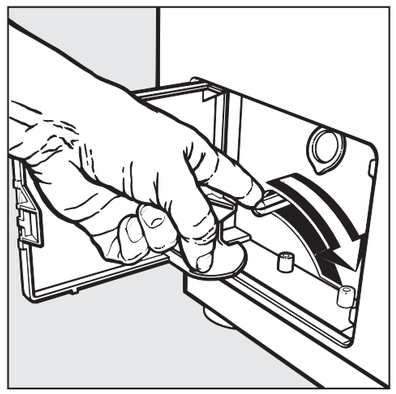

2a. AV machine with drain valve: Push the drain lever downwards and hold until no more water runs out

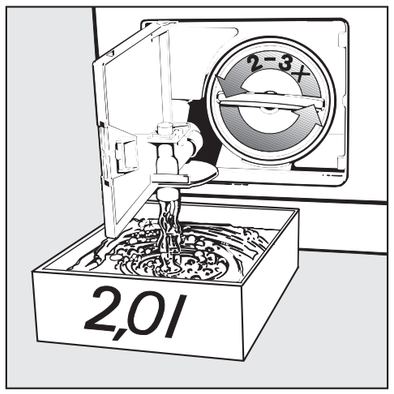

2b. LP machine with drain pump: Loosen the drain filter and let the water run out **CAUTION: water may be hot**

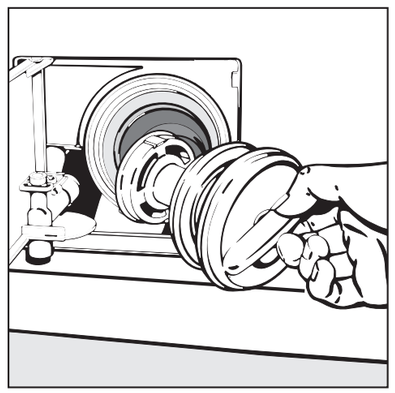

3. Once the flow of water ceases remove the fluff filter completely, clean and put back