Operating and Installation Instructions
Induction Cooktop

To prevent accidents and machine damage, read these instructions **before** installation or use.

en-US

M.-Nr. 09 888 600

Contents

IMPORTANT SAFETY INSTRUCTIONS 4

Overview 15
Cooktop 15
DirectSelection controls 16
Cooking zone data 18

Before using for the first time 19
Cleaning the cooktop for the first time 19
Turning on the cooktop for the first time 19

Induction 20
How it works 20
Noises 21
Cookware 22

Energy saving tips 23

Power setting ranges 24

Operation 25
Basic operation 25
Turning the cooktop On 26
Selecting/Changing the power level 26
Deactivating 26
Residual heat indicator 26
Setting the power level - expanded setting range 27
PowerFlex cooking zone 27
Auto Heat-up 28
TwinBooster / Booster 29
Keep warm function 31

Timer 32
Timer 32
Turning a cooking zone off automatically 33
Using both timer functions at the same time 34

Additional functions 35
Stop & Go function 35

Safety features 36
System lock / Safety lock 36
Safety shut-off 37
Overheat protection 38

Contents

Cleaning and care 39

Programming 41

Frequently asked questions 44

Con@ctivity 48

IMPORTANT SAFETY INSTRUCTIONS - INSTALLATION 49

Safety clearances 50

Ventilation 54

Instructions for installation 55

Installation dimensions 56

Installation 57

Electrical connection 58

Caring for the environment 60

Technical service, data plate, warranty 61

MieleCare 62

IMPORTANT SAFETY INSTRUCTIONS

When using the cooktop, follow basic safety precautions, including the following:

Read all instructions before installation and use of the appliance to prevent accidents and machine damage.

This cooktop conforms to current safety requirements. Improper use can, however, lead to personal injury and damage to property.

To avoid the risk of accidents and damage to the appliance, please read these instructions carefully before using the appliance for the first time. They contain important notes on installation, safety, use and maintenance.
Miele cannot be held liable for damage occurring as a result of non-compliance with these instructions.

Keep these instructions in a safe place and pass them on to any future owners.

Use

▶ This cooktop is intended for domestic use and use in other similar environments.

▶ This cooktop is not intended for outdoor use.

▶ The cooktop is intended for domestic use only to prepare food and keep it warm. Any other use may be dangerous.

▶ Persons who lack physical, sensory or mental abilities, or experience with the appliance should not use it without supervision or instruction by a responsible person.

Children

▶ As with any other appliance, children must be supervised.

▶ Do not leave children unattended: Children should not be alone or unsupervised in the area where the appliance is installed. Do not allow them to sit or stand on the appliance.

▶ Children under eight years of age must be kept away from the cooktop unless they are constantly supervised.

▶ Children ages eight and up may only use the cooktop without supervision if they have been shown how to use it in a safe manner, and if they are able to recognize and understand the potential risks of improper use.

▶ Children must not be allowed to clean the cooktop without supervision.

▶ Be sure to supervise any children in the vicinity of the cooktop, and do not let them play with it.

▶ The cooktop gets hot when in use and remains hot for some time after being turned off. Keep children away from the appliance until it has cooled down and is no longer a burn hazard.

▶ Burn hazard!
Keep the spaces above and behind the cooktop clear of any items that could draw the attention of children. Otherwise, they can be tempted into climbing onto the appliance.

▶ Danger of burning or scalding!
Turn all handles away from the front of the cooktop so that children cannot pull pots and pans down and burn themselves.

▶ Danger of suffocation! Ensure that any plastic wrappings, bags, etc. are disposed of safely and kept out of the reach of children.

▶ Activate the system lock to ensure that children cannot turn on the appliance inadvertently. Use the safety lock when the hob is in use to prevent children from altering the settings selected.

Technical safety

▶ Installation, repair and maintenance work should be performed by a Miele authorized service technician in accordance with national and local safety regulations and the provided installation instructions. Contact Miele's Technical Service Department for examination, repair or adjustment. Repairs and other work by unauthorized persons could be dangerous and may void the warranty.

▶ Maintenance by the user: Never repair or replace any part of the appliance unless the instructions specifically recommend doing so. Service work may only be performed by a qualified technician.

▶ A damaged cooktop can be dangerous. Always check for visible signs of damage. Never use a damaged appliance.

▶ Reliable and safe operation of the cooktop can only be guaranteed if it is connected to the public power supply.

▶ Be certain your appliance is properly installed and grounded by a qualified technician. To guarantee the electrical safety of this appliance, continuity must exist between the appliance and an effective grounding system. It is imperative that this basic safety requirement be met. If there is any doubt, have the electrical system of the house checked by a qualified electrician.

▶ Proper installation: Make sure that your appliance has been installed correctly and that it has been grounded by a qualified technician.

▶ To avoid damaging the cooktop, make sure that the connection data (voltage and frequency) on the data plate correspond to the building's power supply before connecting the appliance.
When in doubt, consult a qualified electrician.

▶ Do not connect the appliance to the electrical supply with a power bar or extension cord. These are a fire hazard and do not guarantee the required safety of the appliance.

▶ For safety reasons, the cooktop may only be used when it has been fully installed.

▶ This appliance must not be used in a non-stationary location (e.g. on a ship).

▶ Any contact with live connections or tampering with the electrical or mechanical components of the cooktop will endanger your safety and may lead to appliance malfunctions.
Do not open the casing of the cooktop under any circumstances.

▶ Any repairs not performed by a Miele authorized service technician will void the warranty.

▶ Defective components should be replaced by Miele original parts only. Only with these parts can the manufacturer guarantee the safety of the appliance.

▶ The appliance is not intended for use with an external timer switch or a remote control system.

▶ Connection of the cooktop to the electrical power supply must only be performed by a qualified electrician (see "Electrical connection").

▶ If the power cord is damaged, it must be replaced by a qualified electrician with a special power cord, which is available from Miele Service. See "Electrical connection."

▶ The appliance must be completely disconnected from the electricity supply during installation, maintenance and repair work. Ensure that power is not supplied to the appliance until after it has been installed or until any maintenance or repair work has been carried out.
Disconnect by

– removing the fuse,
– "tripping" the circuit breaker, or
– unplugging the unit (if equipped with plug). Pull the plug not the cord.

▶ If the cooktop is fitted with a communication module, in addition to disconnecting the cooktop, this module must also be disconnected from the electrical supply during installation and maintenance of the cooktop as well as while any repair work is being carried out.

▶ Risk of electric shock!
If the ceramic surface of the cooktop is defective or chipped, cracked or broken in any way, immediately turn the cooktop off and do not continue to use it. Disconnect the cooktop from the power supply and contact Miele.

▶ If the cooktop is installed behind a cabinet door, do not close the door while the cooktop is in operation. Heat and moisture can build up behind the closed door and cause damage to the cooktop, cabinetry, and flooring. Do not close the door until the cooktop has completely cooled down.

Proper use

▶ The cooktop gets hot when in use and remains hot for a while after being turned off. There is a potential hazard until the residual heat indicator goes out.

▶ When in use, the cooktop emits a significant amount of heat, which can cause objects in the vicinity to catch fire.
Never use the cooktop to heat the room.

▶ Do not leave the cooktop unattended when cooking on high power. Spilled food will begin to smoke and cause grease splatter, which can ignite on the cooktop.

▶ Oil and fat can catch fire if overheated. Never leave the appliance unattended when cooking with oil and fat. If the oil or fat catches fire, do not attempt to put the flames out with water.
Turn off the cooktop and smother the flames using a lid or a suitable fire blanket.

▶ Smother the fire or flames, or use a dry chemical extinguishing agent or foam fire extinguisher.

▶ Storage in or on the appliance: Flammable materials should not be stored in an oven or in the vicinity of the cooktop.

▶ The flames could set the grease filters of a ventilation hood on fire. Do not flambé under a ventilation hood.

▶ Spray canisters, aerosols and other inflammable substances can ignite when heated. Therefore do not store such items or substances in a drawer under the appliance. Cutlery inserts must be heat-resistant.

▶ Never heat empty cookware.

▶ Do not heat or can food in closed containers, such as tins or sealed jars, on the cooktop, as pressure will build up in the container and cause it to explode.

▶ If the cooktop is covered, there is a risk that the material of the cover will ignite, explode or melt if the range is still hot or if turned on inadvertently. Never cover the cooktop with a board, cloth or protective sheet.

▶ If the cooktop is turned on or accidentally turned on or if it is still hot, metal objects on the cooktop can heat up. Other items may melt or catch fire. Damp lids can become attached to the cooktop by suction. Do not store items on the cooktop! Always turn the burners off after use!

▶ You could burn yourself on the hot cooktop. Protect your hands with heat-resistant pot holders or gloves when handling hot pots and pans. Do not let them get wet or damp, as this causes heat to transfer through the material more quickly with the risk of scalding or burning yourself.

▶ When using an electrical appliance, e.g. a hand mixer, near the cooktop, make sure that the power cable does not come into contact with the hot cooktop. The cable's insulation could become damaged.

▶ Grains of salt, sugar and sand (e.g. from cleaning vegetables) can cause scratches if they get under pan bases. Make sure that the ceramic surface is clean before placing pans on it.

▶ Even a light object can cause damage to the ceramic cooktop in certain circumstances. Do not drop anything on the ceramic surface.

▶ Do not place hot pans on the sensor buttons and display as this could cause damage to the electronics underneath. Do not place hot pans on the area around the display.

▶ Do not allow solid or liquid sugar, or pieces of plastic or aluminum foil to get onto the burners when they are hot, as they can damage the ceramic surface when it cools down. If this should occur, turn off the appliance and scrape off all the sugar, plastic or aluminum residues while still hot, using a shielded scraper blade. Wear oven gloves. Allow the burners to cool down and clean them with a suitable ceramic cleaning agent.

▶ Pans that boil dry can cause damage to the ceramic glass. Do not leave the appliance unattended while it is being used.

▶ Pots and pans with bases with pronounced edges or ridges can scratch the ceramic burner. Only use pots and pans with smooth bases.

▶ Lift pans into position on the cooktop. Sliding them into place can cause scuffs and scratches.

▶ Fire hazard! Loose-fitting or hanging garments can catch fire. Be sure to wear appropriately fitting clothing when cooking. Never allow loose clothing or flammable materials to come into contact with the burners while the burners are in use.

▶ Because induction heating works so quickly, the temperature of the cookware bottom can quickly reach the ignition point of oils and fats. Never leave the cooktop unattended when it is on!

▶ Do not heat oils and fats for longer than one minute, and never use the booster.

▶ For people who have a heart pacemaker: Please note that the area immediately surrounding the cooktop is electromagnetically charged. It is very unlikely to affect a pacemaker. However, if in any doubt, consult the manufacturer of the pacemaker or your doctor.

▶ Objects affected by electromagnetic fields, for instance credit cards, CDs and calculators, should be kept away from the cooktop when it is on.

▶ Metal utensils stored in a drawer under the cooktop can become hot if the appliance is used intensively for a long time. Do not store any metal items or utensils in a drawer under the cooktop.

▶ This cooktop is equipped with a cooling fan. If a drawer is fitted directly underneath the cooktop, ensure that there is sufficient space between the drawer and its contents and the underside of the appliance in order to ensure sufficient ventilation of the cooktop. Do not store pointed or small items or paper in the drawer. They could get in through the ventilation slots or be sucked into the housing by the fan and damage the fan or impair cooling.

▶ Do not use two pans on a cooking zone at the same time.

▶ If the cookware only partially covers the cooking or roasting zone, the handle could become very hot.
Make sure to place the cookware in the middle of the cooking or roasting zone.

▶ Wet sponges or clothes can cause burns due to hot steam if they are used to wipe spilled food off a hot burner. Some cleansers can emit hazardous vapors if they are applied to a hot surface. Be careful when cleaning the cooktop.

▶ If the burner is damaged, cleansers or spilled food can penetrate the glass surface and cause a short-circuit. Never cook on a damaged burner. Contact an electrician immediately.

Cleaning and care

▶ Do not use a steam cleaner to clean the cooktop.
The steam may reach electrical components and cause a short circuit.

▶ If the cooktop is built in over a self cleaning oven, the cooktop should not be used while the self cleaning process is being carried out, as this could trigger the overheating protection mechanism on the cooktop (see relevant section).

Cooktop

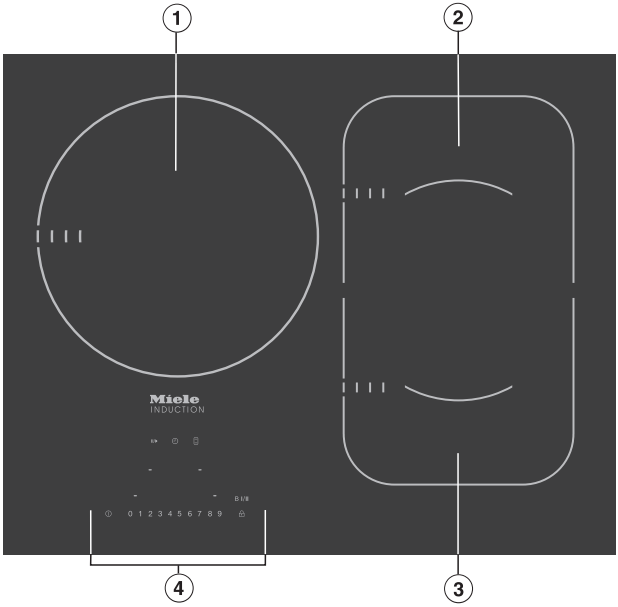

① Cooking zone with TwinBooster

② PowerFlex cooking zone with TwinBooster

③ PowerFlex cooking zone with TwinBooster

②③ can be combined to form PowerFlex cooking area

④ DirectSelection controls

DirectSelection controls

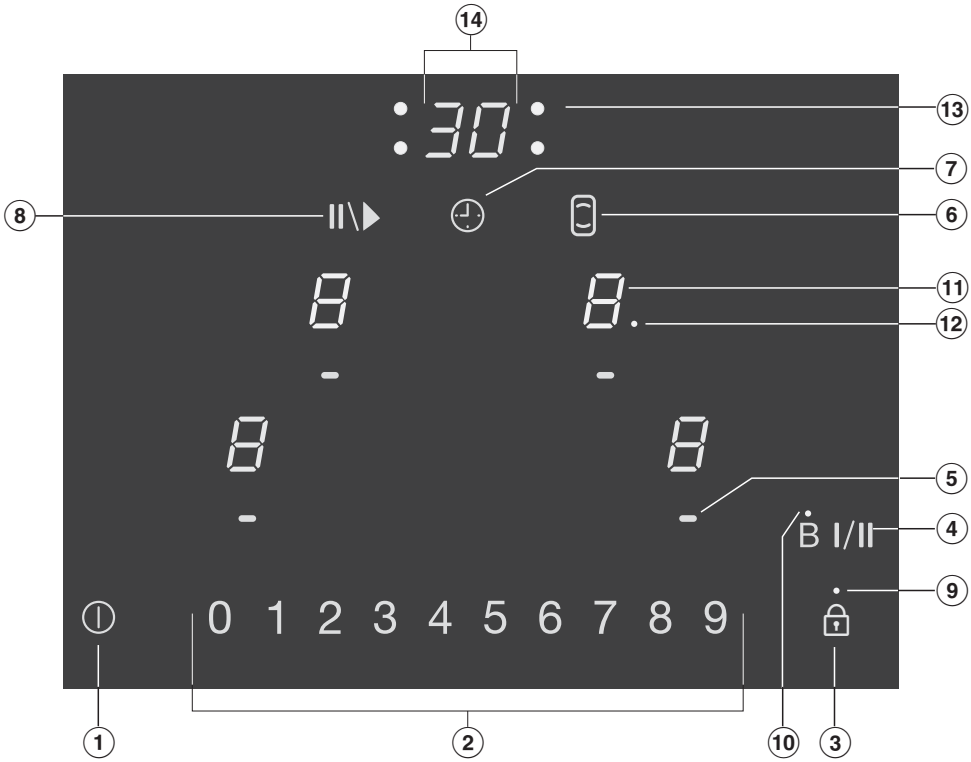

Sensor buttons

① Turning the cooktop On/Off

② Control scale
- Selecting the power setting
- Setting the timer times

③ Activating and deactivating the System lock/Safety lock

④ Turning the booster/TwinBooster On/Off

⑤ Selecting the cooking zone

⑥ Turning the PowerFlex area On/Off

⑦ Timer
- Turning On/Off
- Switching between timer functions
- Selecting a burning (see "Turning a cooking zone off automatically")

⑧ Activating/deactivating the Stop & Go function

Indicator lights

⑨ System lock/Safety lock activated

⑩ Booster/TwinBooster activated

⑫ Indicator light for Auto Heat-up or increased number of power levels (see "Programming")

⑬ Indicator light for cooking zone selection, e.g., right rear zone

⑪ **Cooking zone indicator**

0	Cooking zone ready for use
h	Keep warm function
1 bis 9	Power level
ı	TwinBooster Level 1
ıı	Booster/Stufe 2 TwinBooster
-	PowerFlex area activated
u	Missing or unsuitable cookware (see "Induction")
E	Residual heat
A	Auto Heat-up

Timer display

⑭ Time in minutes

LC System lock/Safety lock activated

dE Demo mode activated

Cooking zone data

Cooking zone	Diameter* Ø		Output in watt**		
	Inches	Centimeters		208 V	240 V
	7 – 11	18 – 28	Normal TwinBooster, Level 1 TwinBooster, Level 2	2200 2700 3350	2500 3100 3850
	6 – 9	15 – 23	Normal TwinBooster, Level 1 TwinBooster, Level 2	1900 2700 3350	2200 3100 3850
	6 – 9	15 – 23	Normal TwinBooster, Level 1 TwinBooster, Level 2	1900 2700 3350	2200 3100 3850
+	8 $^{11}/_{16}$ – 9 / 6 x 9 – 9 x 15 $^{3}/_{8}$	22 – 23 / 15 x 23 – 23 x 39	Normal TwinBooster, Level 1 TwinBooster, Level 2	3050 4300 6700	3550 5000 7700
			Total	6700	7700

* Cookware of any diameter may be used within the specified range.

** The wattage quoted may vary depending on the size and material of the pans used.

- Please adhere the extra data plate for the appliance supplied with this documentation in the space provided in the "Technical service, data plate, warranty" section of this manual.
- Remove any protective foil and stickers.

Cleaning the cooktop for the first time

- Before first use, wipe down the appliance with a damp cloth and dry it.

Turning on the cooktop for the first time

Metal components are protected by a conditioning agent. Smells and vapor may occur when the appliance is used for the first time. The heating of the induction coils also causes odors in the first few hours of operation. With each subsequent use, the odor is reduced until it disappears entirely.

The smell and any vapors do not indicate a faulty connection or a defective appliance and are not harmful to your health.

Please note that the heat-up time for induction cooktops is very much shorter than for conventional cooktops.

How it works

An induction coil is located under each cooking zone. When a zone is turned on, this coil creates a magnetic field that impacts directly on the base of the pan and heats it up. The zone itself is heated up indirectly by the heat given off by the pan.

An induction cooking zone only works when a ferromagnetic pan is placed on it (see "Cookware"). The induction zone automatically recognizes the size of the pan.

In the cooking zone indicator, the symbol ⍈ will flash alternately with the selected power setting:

- No cookware or unsuitable cookware (items without a magnetizable bottom) is being used.
- The bottom diameter of the cookware being used is too small.
- The cookware is removed from a cooking zone that is on.

If suitable cookware is placed on the cooking zone within 3 minutes, the ⍈ goes out, and you can continue as usual.

If no cookware or if unsuitable cookware is used, the cooking zone will automatically turn off after 3 minutes.

⚠ When the appliance is turned on either inadvertently or by mistake, or when there is residual heat present, there is the risk of the metal items heating up.

Danger of burns!

Do not use the cooktop as a storage space. Turn the zones off after use with the appropriate sensor buttons.

Noises

When you use an induction cooking zone, the following noises may occur, depending on the type and shape of the cookware bottom:

On the higher power settings, it might buzz. This will decrease or cease altogether when the power setting is reduced.

Cookware with bottoms made of different materials (e.g. sandwich bottoms) may produce a crackling noise.

Whistling may occur if connected cooking zones (see "Booster") are simultaneously in use and cookware with bottoms made of different materials are on them.

The electronics may produce a clicking sound, especially at lower power settings.

You might hear a whirring sound when the cooling fan turns on. It turns on to protect the electronics when the cooktop is being used intensively. The fan may continue to run after the appliance has been turned off.

Cookware

Suitable cookware is made of:

- stainless steel with a magnetizable bottom
- enamel-coated steel
- cast iron

Unsuitable cookware is made of:

- stainless steel with a non-magnetizable bottom
- aluminum, copper
- glass, ceramics, earthenware, stoneware.

To test whether a pot or pan is suitable for use on an induction cooktop, hold a magnet to the base of the pan. If the magnet sticks, the pan is suitable.
If an unsuitable pan is used, the ⍈ symbol will flash alternately with the power level set.

The composition of the pan bottom can affect the evenness of the cooking results (e.g., when making pancakes).

- To make optimum use of the burners, choose pans with diameters larger than the innermost markings but smaller than the outermost markings (see "Burner data"). If the diameter of the pan is smaller than the innermost marking, the pan will not be recognized and ⍈ will flash alternately with the power level set.
- Pots and pans with bases with pronounced edges or ridges can scratch the ceramic burner. Only use pots and pans with smooth bases.
- Lift pans into position on the cooktop. Sliding them into place can cause scuffs and scratches.
- Often the maximum diameter quoted by manufacturers refers to the diameter of the top rim of the pot or pan. The diameter of the base (generally smaller) is more important.

- Use a lid whenever possible to minimize heat loss.
- For small quantities, select a small pan. A small pan on a small burner uses less energy than a large, only partially filled pan on a large burner.
- Cook with as little water as possible.
- Once food has come to the boil or the pan is hot for frying, reduce the heat to a lower power setting.

Power setting ranges

The cooktop is programmed with 9 power levels at the factory. If you wish to fine-tune a setting, you can extend the power setting range to 17 power levels (see "Programming").

	Setting ranges	
	Default (9 power levels)	**Extended (17 power levels)**
Keep warm level	h	h
Melting butter Dissolving gelatin Melting chocolate	1–2	1–2.
Making pudding	2	2–2.
Warming small quantities of liquid Cooking rice	3	3–3.
Thawing frozen vegetables (blocks)	3	2.–3
Making oatmeal	3	2.–3.
Warming liquid and half-set foods Making omelettes or lightly fried eggs Steaming fruit	4	4–4.
Cooking dumplings	4	4–5.
Steaming vegetables or fish	5	5
Thawing and heating frozen food	5	5–5.
Gently frying eggs (without overheating the fat)	6	5.–6.
Bringing large quantities of food to a boil, e.g., casseroles. Thickening custard and sauces, e.g., hollandaise.	6–7	6.–7
Gently frying meat, fish or sausages (without overheating the fat)	6–7	6.–7.
Frying pancakes, etc.	7	6.–7
Braising for stews	8	8–8.
Boiling large quantities of water Bringing to a boil	9	9

These settings should only be taken as a guide. The power of the induction coils will vary depending on the size and material of the pan. For this reason, it is possible that the settings will need to be adjusted slightly to suit your pans. As you use the cooktop, you will get to know which settings suit your pans best. For new cookware whose properties for use you are not yet familiar with, set the next lowest power level than the one specified.

Basic operation

The ceramic cooktop is equipped with electronic sensor buttons that react to finger contact. During activation, the On/Off ⏻ sensor button muss be pressed somewhat longer than the other buttons for safety reasons.
Each reaction of the buttons is acknowledged with an acoustic signal.

The cooking zones and the timer have to be "active" when you want to set or adjust a power level or the duration. To activate the zone or the timer, tap the selection button of the corresponding zone or the timer. After the selection button is tapped, the corresponding zone or timer indicator light will flash. While the indicator light is flashing, set or adjust the power level or the duration.
Exception: If there is only one cooking zone in operation, you can set or adjust the power level without activating it first.

Malfunction due to dirty and/or covered sensor buttons
The sensor buttons do not react or unintentional switching procedures result, perhaps even the automatic deactivation of the cook top (see "Safety switch-off"). Hot cookware on the sensor buttons/indicator lights can damage the connected electronic module.
Keep the sensor buttons and indicator lights clean, do not place any objects on them, and do not put hot cookware on them.

⚠ Fire hazard!
Do not leave the cooktop unattended during operation!
Please note that the heat-up time for induction cooktops is shorter than for conventional cooktops.

Turning the cooktop On

■ Tap the ⏻ sensor button.

- appears in each of the cooking zone indicators. If no further entry is made, the cooktop will turn itself off after a few seconds for safety reasons.

Selecting/Changing the power level

■ Briefly tap the selection button for the desired cooking zone.

In the cooking zone indicator, 0 will flash alternately with the selected power level.

■ Tap the sensor button for the desired power level on the corresponding control scale.

The set power level flashes in the indicator for a few seconds and then lights up constantly.

Deactivating

■ Briefly tap the selection button of the desired cooking zone twice to turn off the zone.

■ To turn off the cooktop and thus all cooking zones, tap the ⏻ sensor button.

Residual heat indicator

When a cooking zone is hot, the residual heat indicator will light up after deactivation.

The lines of the residual heat indicator go out one after another as the cooking zone cools down. The last horizontal line only goes out when the cooking zone is safe to touch.

The residual heat indicators will flash if there is a power cut during use or while residual heat is still present or if you have opened the programming function while residual heat is still present.

⚠ Risk of burns! Do not touch the burners while the residual heat indicators are on.

Setting the power level - expanded setting range

- Tap the control scale between the sensor buttons.

The set power level flashes in the indicator for a few seconds and then lights up constantly. The intermediate levels are shown with an illuminated point next to the number.

PowerFlex cooking zone

You can combine the PowerFlex cooking zones into one large cooking area (see the "Overview – Cooking zone" chapter). The settings for the cooking area are controlled using the rear or left PowerFlex cooking zone.

Activating

- Tap the sensor button.

0 flashes in the cooking zone display of the rear or left zone. - lights up in the cooking zone display of the front or right cooking zone.

- Tap the corresponding sensor button on the control scale of the rear or left cooking zone to set the desired power level.

Deactivating

- Tap the sensor button.

Auto Heat-up

When Auto Heat-up has been activated, the cooking zone turns on automatically at the highest level and then switches to the previously selected continued cooking level. The heat-up time depends on which continued cooking level has been chosen (see chart).

Turning on

- Briefly tap the selection button for the desired cooking zone.
- Tap the sensor button of the desired continued cooking level until a signal sounds and the indicator light in the cooking zone indicator to the right of the continued cooking level lights up.

During the Auto Heat-up time (see table), the indicator light next to the set continued cooking level lights up.
With extended power levels (see "Programming"), A alternatingly flashes in the cooking zone display with the set continued cooking level.

When you change the continued cooking level, you deactivate Auto Heat-up.

Deactivating

- Briefly tap the selection button for the desired cooking zone.
- Tap the selected continued cooking level until the indicator light or A goes out.

or

- Select a different power level.

Continued cooking level*	Auto Heat-up time [min : sec]
1	approx. 0 : 15
1.	approx. 0 : 15
2	approx. 0 : 15
2.	approx. 0 : 15
3	approx. 0 : 25
3.	approx. 0 : 25
4	approx. 0 : 50
4.	approx. 0 : 50
5	approx. 2 : 00
5.	approx. 5 : 50
6	approx. 5 : 50
6.	approx. 2 : 50
7	approx. 2 : 50
7.	approx. 2 : 50
8	approx. 2 : 50
8.	approx. 2 : 50
9	–

*The continued cooking levels with a dot are only available if the number of power levels has been extended (see "Programming").

TwinBooster / Booster

The cooking zones are equipped with a booster or TwinBooster (see "Overview – Cooking zone"). You can use the booster for a maximum of two cooking zones at the same time.

When activated, the power is boosted for a maximum of 15 minutes so that large quantities can be heated quickly, e.g., pasta water.

If the booster function is turned on when

- no power level has been selected, the cooking zone will revert automatically to level 9 at the end of the booster time or if the booster function is turned off before this.
- a power level has been selected, the cooking zone will revert automatically to the setting selected at the end of the booster time or if the booster function is turned off before this.

Two cooking zones are connected so the power for the booster can be achieved. The connected zone will operate at reduced power while the booster is on. This has one of the following effects:

- If the Auto Heat-up was previously active, it will be turned off.
- The power level that is set will be reduced.
- The connected cooking zone will be turned off.

Activating the booster

- Briefly tap the selection button for the desired cooking zone.
- Select a power level if required.
- Tap the **B I/II** sensor button.

The indicator light for the booster lights up and the cooking zone indicator ,, starts to flash. After a few seconds, ,, lights up constantly and the indicator light goes out.

TwinBooster level 1 activation

- Briefly tap the selection button for the desired cooking zone.
- Select a power level if required.
- Tap the **B I/II** sensor button.

The indicator light for the booster lights up and the cooking zone indicator , starts to flash. After a few seconds, , lights up constantly and the indicator light goes out.

TwinBooster level 2 activation

- Briefly tap the selection button for the desired cooking zone.
- Select a power level if required.
- Touch the **B I/II** sensor button twice.

The indicator light for the booster lights up and the cooking zone indicator ,, starts to flash. After a few seconds, ,, lights up constantly and the indicator light goes out.

Turning the Booster/TwinBooster On/Off

- Briefly tap the selection button for the desired cooking zone.
- Tap the **B I/II** sensor button repeatedly until the booster indicator light goes out and the selected power level appears in the cooking zone display.

or

- Briefly tap the selection button for the desired cooking zone.
- Select a different power level.

Keep warm function

The keep warm function is for keeping food warm that has just been cooked, i.e., food that is still hot. It is not for reheating cold food.

If the keep warm function has been activated, the cooking zone will turn off automatically after a maximum of 2 hours.

– Only use pans for keeping food warm. Cover the pan with a lid.

– It is not necessary to stir the food while it is being kept warm.

– Nutrients are lost when food is cooked, and continue to diminish when food is kept warm. The longer food is kept warm for, the greater the loss of nutrients. Try to ensure that food is kept warm for as short a time as possible.

Setting the keep warm function

■ Briefly tap the selection button for the desired cooking zone.

■ Tap the control scale between the 0 and 1 sensor buttons.

h appears in the cooking zone indicator.

Turning off the keep warm function

■ Briefly tap the selection button for the desired cooking zone.

■ Tap the 0 sensor button.

The cooktop has to be turned on if you wish to use the timer.
You can set a time up to 99 minutes.

The timer can be used for two different functions:

– For setting the timer
– For turning off a cooking zone automatically

Timer

Setting

Example: You want to set a time of 15 minutes.

■ Turn the cooktop on.

■ Tap the ◷ sensor button.

00 appears in the timer display, and the right 0 flashes.

First the tens digit is set then the ones digit.

■ Tap the sensor button on the control scale that corresponds to the tens position (1 in this case).

The timer display will change and 1 will start flashing on the right.

■ Tap the sensor button on the control scale that corresponds to the ones position (5 in this case).

The timer display will change. 1 jumps to the left and 5 appears on the right.

The timer starts counting down.

Changing the timer

■ Tap the ◷ sensor button.

■ Set a new time, as described above.

Deleting the timer

■ Touch the ◷ sensor button until 00 appears in the timer display.

Turning a cooking zone off automatically

You can set a time after which the cooking zone will turn off automatically. This function can be used on all zones at the same time.

If the programmed time is longer than the maximum time allowed, the safety shut-off function will turn off the cooking zone automatically when the maximum time has elapsed (see "safety shut-off").

- Select a power level for the cooking zone you require.
- Keep tapping the ◷ sensor button until the indicator light for this cooking zone starts flashing.

If several cooking zones are on, the indicator lights flash in a clockwise direction, starting with the left front.

- Select the time you require.
- If you want to set another cooking zone to turn off automatically, follow the same steps as described above.

If more than one turn-off time is programmed, the shortest time remaining will be displayed, and the respective indicator light flashes. The other indicator lights light up constantly.

- If you want to see the other remaining times, keep tapping the ◷ sensor button until the desired indicator light flashes.

Using both timer functions at the same time

The timer and automatic turn-off functions can be used at the same time.

If you have programmed in one or more turn-off times, and would like to use the timer as well:

- Tap the ◷ sensor button until the indicator lights of the programmed cooking zones light up constantly and 00 appears in the timer display.
- Set a new time as described above.

If you have set the timer and would like to program one or more turn-off times as well:

- Keep tapping the ◷ sensor button until the indicator light for the desired cooking zone starts flashing.
- Set a new time as described above.

Shortly after the last touch, the shortest remaining time will come up in the timer display.

If you would like to call the other remaining times so that they appear in the display:

- Tap the ◷ sensor button until:

– The indicator light for the desired cooking zone starts flashing (automatic turn-off).

– The timer display starts flashing.

Starting with the shortest time remaining which is shown in the display, all cooking zones which are turned on and the timer are selected clockwise.

Stop & Go function

When activated, the Stop & Go reduces the power of all cooking zones in use to power level 1.
The power levels of the zones and setting of the timer cannot be changed and the cooktop can only be turned off. A set timer and booster time continue to run. The Auto Heat-up time and set times for automatic turn-off are stopped.

When Stop & Go is deactivated, the cooking zones will run on the power level that was previously selected and the Auto Heat-up time and automatic turn-off times start to run again.

If the Stop & Go function is not deactivated, the cooktop turns off automatically after 1 hour.

Activation / deactivation

■ Tap the **II/▶** sensor button.

Use this function to clean the controls quickly or if there is a danger over boiling over.

System lock / Safety lock

The system lock and safety lock are deactivated if there is a power outage.

Three-finger control is the default setting. You can change the default to one-finger control (see "Programming").

Your cooktop is equipped with a safety lock to prevent the cooktop and the cooking zones being turned on or any settings being altered.

The **system lock** is activated when the cooktop is turned off. When it is activated, the cooktop cannot be turned on and the timer cannot be used. The cooktop is programmed so that the system lock must be activated manually. It can be programmed to be activated automatically 5 minutes after the cooktop has been turned off if the system lock is not manually activated first (see "Programming").

The **safety lock** is activated when the cooktop is turned on. When the safety lock is activated, the cooktop can be operated only under certain conditions:

– The power levels for the cooking zones and the timer settings cannot be changed.

– The cooking zones, entire cooktop, and the timer can be turned off, but once turned off cannot be turned on again.

If a locked sensor switch is touched when the safety lock or the system lock is activated, the indicator light comes on and LC appears in the timer display for a few seconds.

Activating

■ Tap the 🔒 sensor button and selection buttons of both right cooking zones until LC appears in the time display and the indicator light of the safety lock lights up.

The indicator light and LC go out after a short while.

Deactivating

■ Tap the 🔒 sensor button and selection buttons of both right cooking zones until LC goes out in the time display and the indicator light of the safety lock extinguishes.

Safety shut-off

Safety shut-off with an overlong cooking time

The safety shut-off is triggered automatically if a cooking zone is heated for an unusually long period of time. This time depends on the power level selected. If it has been exceeded, the cooking zone turns off and the residual heat indicator appears. If you turn the cooking zone on and off again, it is ready for operation again.

Safety shut-off if the sensors are covered

Your cooktop will turn off automatically if one or several of the sensors remain covered for longer than 10 seconds, for example, by finger contact, food boiling over or by an object such as an oven glove or tea towel. *F* flashes in the timer display and a buzzer sounds every 30 seconds for 10 minutes.
When you remove the objects or soiling, *F* extinguishes, the buzzer goes off, and the cooktop is ready for operation again.

Overheat protection

All the induction coils and the cooling elements for the electronics are equipped with an overheating protection mechanism. To prevent the induction coils and cooling elements from overheating, the overheating protection mechanism works on the affected cooking zone or on the entire cooktop in the following ways:

Inductive coils

- Any booster function in operation will be turned off.
- The power level that is set will be reduced.
- The cooking zone turns off automatically. FE flashes in the timer display alternatingly with 44.

You can use the cooking zones again as usual when the fault message has gone out.

Cooling elements

- Any booster function in operation will be turned off.
- The power level that is set will be reduced.
- The cooking zones turn off automatically.

The affected cooking zones can only be used again if the cooling element has cooled down to a safe level.

Overheating can be caused by:

- Heating empty cookware
- Fats or oils being heated at high power settings
- Underside of cooktop insufficiently ventilated
- A hot cooking zone being turned on after a power outage

If, despite elimination of the cause, the overheat protection is triggered again, contact Miele Service.

⚠ Burn hazard!
The burners must be turned off and allowed to cool completely.

⚠ Risk of injury!
The steam from a steam cleaner could reach electrical components and cause a short circuit.
Do not use a steam cleaner to clean the cooktop.

All cooktop surfaces can become discolored or damaged if unsuitable cleaning agents are used.
The outer surfaces of the cooktop are susceptible to scratching.
Immediately remove any residues left by cleaning agents.

Unsuitable cleaning agents

To prevent damage to surfaces, avoid the following while cleaning:

- Liquid dish soap
- Cleaners containing soda, alkaline, ammonia, thinners, or chlorides
- Descaling agents
- Stain or rust removers
- Abrasive cleaning agents, such as powder or cream cleansers, pumice stones
- Solvent-based cleaners,
- Dishwasher detergent
- Grill and oven sprays
- Glass cleaning agents
- Hard, abrasive brushes or sponges, e.g., pot scourers, brushes or sponges which have been previously used with abrasive cleaning agents
- Eraser sponges

Do not clean the area between the glass-ceramic surface and the frame or the frame and the counter with sharp objects.

This could cause damage to the seals.

When cleaning with dishwashing liquid, not all contaminants and residues are removed.

An invisible film forms, which causes discoloration of the ceramic. This discoloration cannot be removed.

Clean the cooktop on a regular basis with a special ceramic cleaner.

First wipe down the surface with a damp cloth to loosen soiling, then remove stubborn crusting with a glass scraper.

Clean the cooktop with the Miele ceramic and stainless steel cleaner (see "Optional accessories") or a commercial ceramic cleaner and paper towel or a clean cloth. Do not put the cleaner on a hot cooktop since this may cause spotting. Please follow the manufacturer's instructions.

Then clean the cooktop with a damp cloth and dry it off. Cleaner residues will burn into the cooktop during subsequent uses, damaging the surface. Make sure you remove all residues.

Spots from lime deposits, water, and aluminum deposits (metallic spots) can be removed with a ceramic and stainless steel cleaner.

⚠ Danger of burns!

Wear pot holders and use a glass scraper to remove sugar, plastic or aluminum residues from the hot cooktop.

Should any **sugar, plastic or aluminum foil** spill or fall onto a hot cooking zone while it is in use, first turn off the appliance. Then carefully scrape off these residues from the cooktop **immediately** while they are still hot, using a shielded scraper blade. Allow the appliance to cool down, and then clean the cooktop when it has cooled down as described above.

You can adapt the programming of the cooktop to your personal needs. Several settings can be changed in succession.

After the programming function is started, P (program) and S (status) will appear in the timer display. With cooktops that have 3 cooking zones, an additional display appears at the back left.

The program is displayed in the front left and back left cooking zone displays.

Example:
Program 03 =
Front left 0, rear left 3
Program 14 =
Front left 1, rear left 4

The status is shown in the front right cooking zone display.

After the programming function is exited, an automatic reset is performed. It is concluded when an indicator light lights up briefly via the ⏻ sensor button.
Do not turn on the cooking zone until the reset is concluded.

Starting the programming function

- When **the cooking zone is turned off**, tap the ⏻ and 🔒 sensor buttons simultaneously until the indicator light for the safety lock flashes.

Setting a program

- To set the **ones**, touch the sensor for the **back left** cooking zone followed by the respective number on the settings bar.
- To set the **tens**, touch the sensor for the **front left** cooking zone followed by the respective number on the settings bar.

Setting the status

- Touch the sensor for the **front right** cooking zone followed by the respective number on the settings bar.

Saving the settings

- Touch the ⏻ sensor until the indicators go out.

How to avoid saving the settings

- Touch the 🔒 sensor until the indicators go out.

Program[1)]		Status[2)]	Settings
P00	Demo mode and default settings	S0	Demo mode on[3)]
		S1	Demo mode off
		S9	Default settings reinstated
P01	Stop & Go	S0	Off
		S1	On
P02	Number of power levels	**S0**	9 power levels
		S1	17 power levels[4)]
P03	Induction buzzer tone when there is no or unsuitable cookware.	**S0**	Off
		S1	Quiet
		S2	Medium volume
		S3	Loud
P04	Tone when a sensor button is touched	S0	Off
		S1	Quiet
		S2	Medium volume
		S3	Loud
P05	Timer buzzer tone	S0	Off
		S1	Quiet
		S2	Medium volume
		S3	Loud
P06	System lock / Safety lock	S0	One-finger control with 🔒
		S1	Three-finger control with simultaneous tapping of 🔒 and the selection buttons of both right cooking zones
P07	System lock	**S0**	Manual activation of the system lock only
		S1	Manual and automatic activation of the system lock
P08	Auto Heat-up	S0	Off
		S1	On

Program[1]		Status[2]	Settings
P10	Con@ctivity - only on communication-enabled appliances retrofitted with a wireless stick -	**S0**	Not currently available
		S1	Logged off
		S2	Logged on
P15	Buzzer tone if the sensors are covered	**S0**	Off
		S1	On
P16	Sensor button reaction speed	S0	Slow
		S1	Normal
		S2	Fast

[1] Unlisted programs are not assigned.

[2] The default setting is shown in bold.

[3] After the cooktop is activated, dE appears in the timer display for several seconds.

[4] The intermediate levels are shown on the cooking zone indicator with a point after the power level. Display of the Auto Heat-up through the flashing of the continued cooking level alternating with A.

Frequently asked questions

The following guide is intended to help you resolve problems that occur during normal operation of the appliance.
If you are unable to identify or remedy the cause of the problem on your own, please contact Miele Service (see back cover for details).

⚠ Risk of injury! Improperly performed installation, maintenance or repair work can pose a serious danger to users of the appliance.
Installation, maintenance and repairs may only be carried out by Miele authorized technicians.
Do not attempt to open the cooktop casing yourself.

Problem	Possible cause and solution
Cooktop or cooking zones cannot be turned on.	There is no power to the cooktop. ■ Check if the circuit breaker has tripped. Contact an electrician or Miele Service (for the minimum fuse rating, see data plate).
	There may be a technical fault. ■ Disconnect the appliance from the electric power supply for approx. 1 minute by – tripping the relevant circuit breaker or screwing the fuse out completely, or – tripping the ground fault circuit interrupter (GFCI). ■ If, after resetting/replacing the fuse or the GFCI, it still will not turn on, contact a qualified electrician or Miele Service.
There is a strange smell or vapors when the appliance is being used for the first time.	Metal components are protected by a conditioning agent. Smells and vapor may occur when the appliance is used for the first time. The smell and any vapors do not indicate a faulty connection or a defective appliance and are not harmful to your health. With each subsequent use, the odor is reduced until it disappears completely. The smell and any vapors do not indicate a faulty connection or a defective appliance and are not harmful to your health.
In the burner display, the ⊔ symbol will flash alternately with the selected power setting or A.	There is no or unsuitable cookware on the burner. ■ Use a suitable pan (see "Cookware").

Problem	Possible cause and solution
After the cooktop is activated, LC appears in the timer display for several seconds.	The system lock or safety lock is activated. ■ Deactivate the system lock or safety lock (see "System lock / Safety lock").
F flashes in the timer display and the cooktop turns off automatically.	One or more of the sensor buttons are covered, for example by fingers, food boiling over or by an object. ■ Clean off any dirt or remove the object (see "Safety shut-off").
After turning on the cooktop, dE appears in the timer display for several seconds. The cooking zones don't heat up.	The cooktop is in demo mode. ■ Deactivate demo mode (see "Programming").
A burner switches itself off automatically.	A burner might have been operated for too long. ■ You can use the burner again by switching it back on (see "Safety switch-off").
A cooking zone or the whole cooktop turns off automatically.	The overheat protection was triggered. ■ See "Overheat protection."
The booster has automatically switched off early.	The overheat protection was triggered. ■ See "Overheat protection".
The burner is not working in the usual way with the set power level.	The overheat protection was triggered. ■ See "Overheat protection".
Power setting 9 is automatically reduced if you select power setting 9 on two linked burners or extended zones at the same time.	Operating both zones at power level 9 would exceed the permitted maximum power for the cooktop. ■ Use another burner that is not linked.

Problem	Possible cause and solution
Auto Heat-up is turned on, but the food does not start cooking.	Large amounts of food are being heated. ■ Start cooking at the highest power level, then reduce the power level manually.
	The pan is not conducting heat properly. ■ Use a different pan that is able to better conduct heat on an induction cooktop.
A noise can be heard after the appliance is turned off.	The fan will continue running until the appliance has cooled down. It will then switch itself off automatically.
One or more residual heat indicators is flashing.	There was a power failure during operation or when residual heat was present. You called the programming function while residual heat was still present.
The sensor buttons are over-sensitive or do not react at all.	The sensitivity level of the sensor buttons has changed. ■ Ensure that the cooktop is not in direct sunlight or strong artificial light and that the area around the cooktop is not too dark. ■ Make sure that there is nothing covering the sensor buttons or the cooktop. Take any pans off the cooktop and wipe away any food deposits. ■ Interrupt the power supply to the cooktop for approx. 1 minute. ■ If the problem persists after power is restored, please contact Miele Service.

Problem	Possible cause and solution
FE **Alternating with a number flashes in the timer display.**	FE44 The overheat protection was triggered. ■ See "Overheat protection."
	FE47 or FE48 The fan is blocked or defective. ■ Make sure it has not been blocked by something like a fork. Remove the cause of the blockage. ■ If this fault message continues to appear in the display, contact Miele Service.
	FE and other numbers There is a fault in the electronic module. ■ Interrupt the power supply to the cooktop for approx. 1 minute. ■ If the problem persists after power is restored, please contact Miele Service.

Your cooktop is communication enabled and can communicate with the ventilation hood using the wireless USB stick included with selected ventilation hoods (Con@ctivity). The cooktop sends information on its operating status to the ventilation hood. The operation of the ventilation hood is automatically controlled by the power setting of the connected cooktop.

If you want to log your cooktop onto **Con@ctivity**, you must first log on to the ventilation hood.

Logging on the cooktop

- When **the cooking zone is turned off**, tap the ⏻ and 🔒 sensor buttons simultaneously until the indicator light for the safety lock flashes.

P (program) and S (status) will appear in the timer display. With cooktops that have 3 cooking zones, an additional display appears at the back left.

- Tap the selection button for the **front left** cooking zone and then power level 1 on the control scale (Set Program 10).
- Tap the selection button for the **front right** cooking zone and then power level 2 on the control scale (Set Status 2 = log on).

The log-on process starts, and the number 2 flashes on the cooking zone indicator. The log-on process will take a few minutes. The number 2 will light up constantly when the process has been completed successfully.

- To save the setting, tap the ⏻ sensor button until the indicators go out.
- Conclude the log-on on the hood/display devices (see the corresponding instructions).

Logging off the cooktop

- When **the cooking zone is turned off**, tap the ⏻ and 🔒 sensor buttons simultaneously until the indicator light for the safety lock flashes.

P (program) and S (status) will appear in the timer display. With cooktops that have 3 cooking zones, an additional display appears at the back left.

- Tap the selection button for the **front left** cooking zone and then power level 1 on the control scale (Set Program 10).
- Tap the selection button for the **front right** cooking zone and then power level 1 on the control scale (Set Status 1 = log off).

The log-off process starts, and the number 1 flashes on the cooking zone indicator. The log-off process will take a few minutes. The number 1 will light up constantly when the process has been completed successfully.

- To save the setting, tap the ⏻ sensor button until the indicators go out.

⚠ Installation and connection of the cooktop to the electrical power supply may only be performed by a qualified electrician.

Install the upper cabinets and ventilation hood before installing the cooktop to avoid damaging it.

▶ Reaching over a hot cooktop to access the cabinets can result in burns. You can reduce the risk of burns by installing a ventilation hood that extends at least 4 $^3/_4$" (12 cm) past the bottom of the cabinets. Do not install any cabinets above the cooktop.

▶ The countertop must be heat-resistant (up to 212°F / 100°C), so that it does not become deformed or the veneer detached. The wall strips must be heat-resistant as well.

▶ The cooktop must not be installed above refrigerators/freezers, dishwashers, or washer/dryers.

▶ This cooktop may only be installed above a stove or oven if they have a built-in cooling fan.

▶ Ensure that the power cord cannot be touched after the cooktop has been installed.

▶ After the installation of the cooktop, the electrical cord may not come into contact with any moving kitchen parts (e.g. a drawer) or be subject to mechanical stress.

▶ Observe carefully the safety clearances listed on the following pages.

Safety clearance above the cooktop

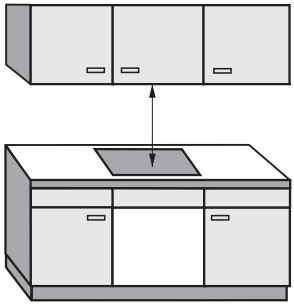

For a ventilation hood above the cooktop, always use the clearance specified by the hood manufacturer. If there are no specifications from the hood manufacturer or if flammable materials (e.g. a utensil rail) are installed above the cooktop, the clearance must be at least 30" (760 mm).

If there is more than one appliance installed below the ventilation hood, each with a different safety clearance, the largest clearance must be used.

Safety clearances to the sides and back of the cooktop

In installing a cooktop there may be an optionally high cabinet or room wall against the rear side and one of the sides (right **or** left) (see illustrations).

① minimum distance between the **back** of the counter cut-out and the rear edge of the counter:
2" (50 mm)

② minimum distance to the **right** of the counter cut-out to the closest adjacent piece of furniture (for instance, a high cabinet) or a room wall:
2" (50 mm)

③ minimum distance to the **left** of the counter cut-out to the closest adjacent piece of furniture (for instance, a high cabinet) or a room wall:
2" (50 mm)

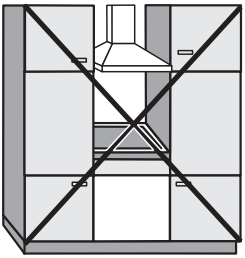

Not permitted!

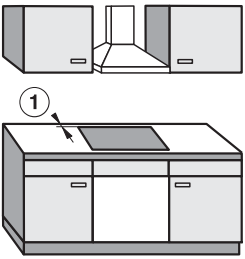

Highly recommended!

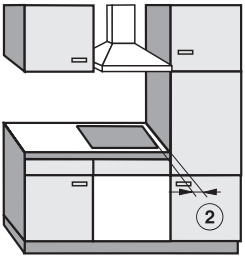

Not recommended!

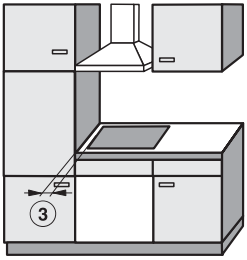

Not recommended!

Minimum clearance underneath the cooktop

To ensure proper ventilation of the cooktop, a minimum clearance is required between the appliance and an oven, protective base, or drawer.

The minimum clearance from the bottom of the cooktop to

- the top of the **oven** must be **$^{9}/_{16}$" (15 mm)**.
- the top of the **protective base** must be **$^{9}/_{16}$" (15 mm)**.
- bottom of the **drawer** must be **3" (75 mm)**.

Protective base

Installation of a protective base under the cooktop is allowed but not required.

A gap of 3" (75 mm) at the back is required for the power supply cord. For better cooling of the cooktop, we recommend a gap of 2" (50 mm) at the front.

Safety distance from the wall covering

If a wall covering is installed, a minimum safety distance must be maintained between the countertop cut-out and the covering, since high temperatures can damage these materials.

If the covering is made of a combustible material (such as wood), the distance between the countertop cut-out and the wall covering must be a minimum of 2" (50 mm).

For coverings made of non-combustible materials (such as metal, marble, granite, ceramic tiles) the minimum safety distance between the countertop cut-out and the wall covering must be 2" (50 mm) minus the thickness of the covering. For example: thickness of wall covering 2" (50 mm) - $^{9}/_{16}$" (15 mm) = minimum safety distance 1 $^{3}/_{8}$" (35 mm).

Flush-mounted cooktops

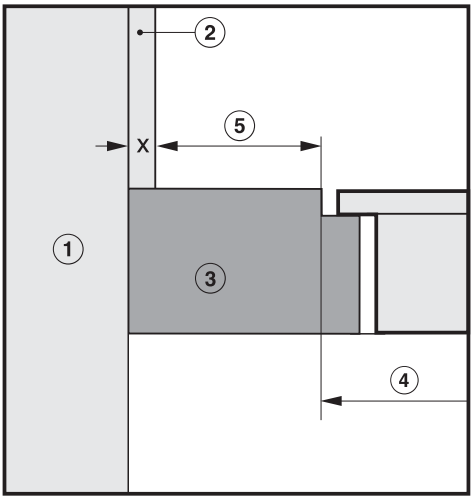

Framed cooktops

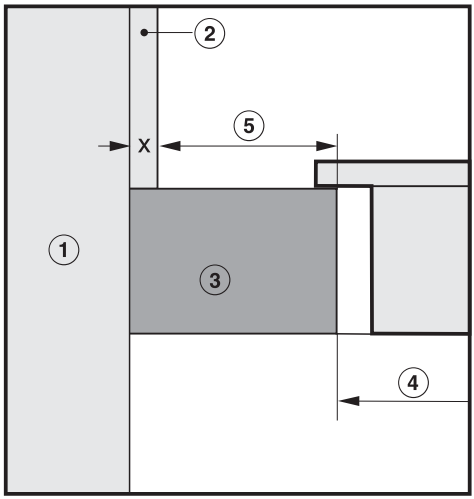

① Wall frame

② Wall covering dimension x = thickness of the niche cladding

③ Countertop

④ Countertop cut-out

⑤ Minimum distance for

flammable materials 2" (50 mm).

non-flammable materials 2" (50 mm) - dimension x

Ventilation

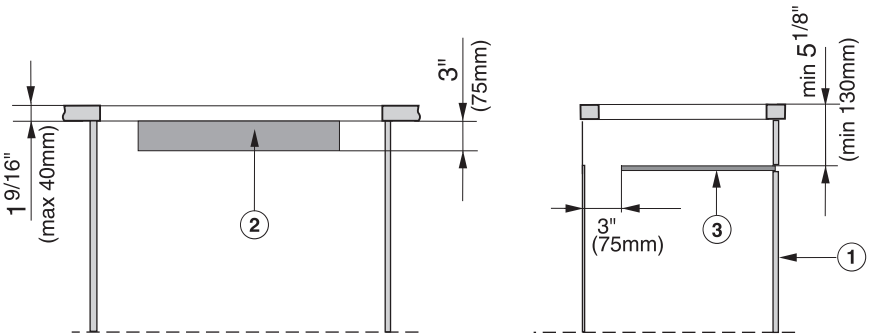

① Front

② Ventilation cut-out in the rear wall of the cabinetry
19" x 3" (482 x 75 mm)
(Slight) ventilation also takes place when the cabinet is directly against the wall.

③ Protective base
The installation of a protective base beneath the cooktop is not required, but permitted.
If a protective base is installed, the distance between the top edge of the countertop and the top edge of the base must be at least $5^1/_8$" (130 mm) for proper ventilation of the cooktop.
Leave an air gap of 3" (75 mm) at the back for the power cord.

Seal between cooktop and counter

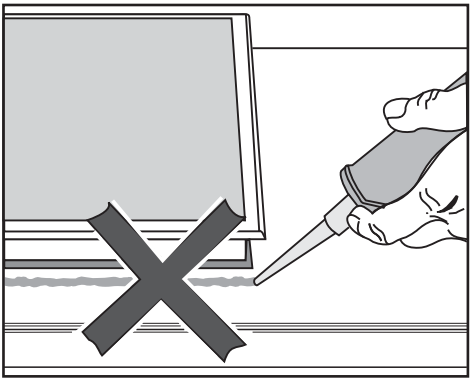

In case a disassembly is required, the appliance must not be permanently sealed into the countertop when installed. The sealing strip under the edge of the appliance provides a sufficient seal for the countertop.
If the appliance is sealed into position, the countertop or appliance could be damaged if it needs to be removed for maintenance or service.

Tiled countertop

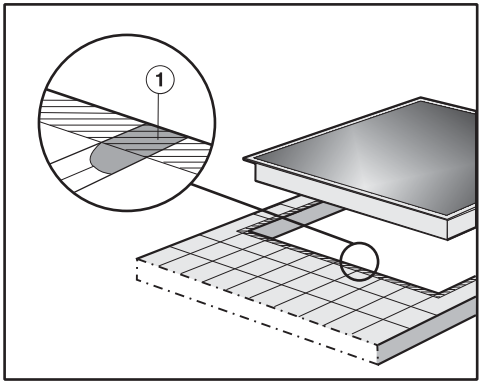

The grouting ① and shaded area under the appliance frame must be flat and even so that the frame will lie evenly and the sealing strip under the edge of the upper part of the appliance can provide an adequate seal against the countertop.

Installation dimensions

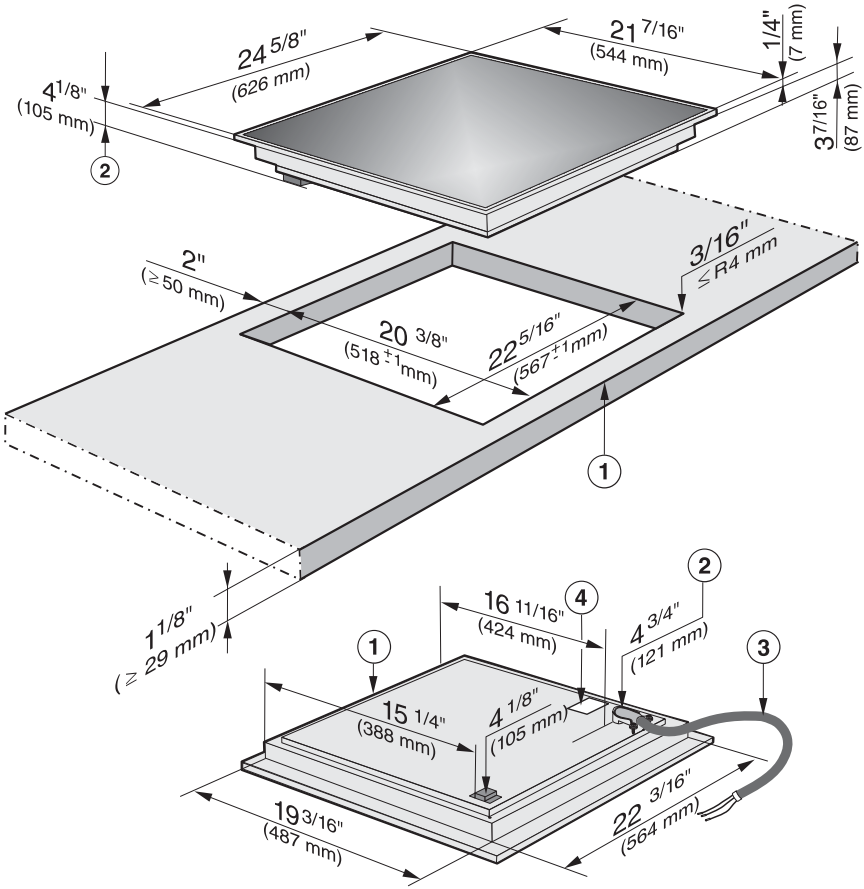

① Front

② Installation height

③ Flexible metal hose with power cord, L = 3' 11 1/4" (1200 mm)

④ Data plate

Preparing the counter

- Create the counter cut-out as shown in the cooktop diagram and in the detailed drawing. Remember to maintain a minimum safety distance (see "Safety clearances").
- Seal any wooden counter surfaces with a special varnish, silicone rubber, or resin to help prevent swelling from moisture. The sealant must be temperature resistant.

Ensure that the sealant does not get on the top surface of the countertop.

The sealing tape guarantees a non-slipping seat of the cooktop in the cut-out. The gap between the frame and counter reduces with time.

Installing the cooktop

- Feed the appliance power cord down through the counter cut-out.
- Center the cooktop in the cut-out. Make sure that the seal under the cooktop sits flush with the counter on all sides. This is important to ensure an effective seal.

NEVER seal the cooktop using additional sealing material such as silicon!

If during installation the seal around the frame does not sit flush with the countertop in the corners, the corner radius, maximum 3/16" (4 mm), can be carefully filed down to fit.

- Connect the cooktop to the electrical power supply.
- Check that the cooktop works.

⚠ ATTENTION:
Before installation or servicing, disconnect the power supply by either removing the fuse, shutting off the main power or manually "tripping" the circuit breaker.

Installation work and repairs should only be performed by a qualified technician in accordance with all applicable codes and standards. Repairs and service by unqualified persons could be dangerous and the manufacturer will not be held responsible.Installation, repair, and maintenance work should only be performed by a Miele-authorized service technician. Work by unqualified persons can cause considerable danger to users. Miele cannot be held liable for any damage arising as a result of such work.

Before connecting the appliance to the power supply, make sure that the voltage and frequency listed on the rating label correspond with the household electrical supply. This data must correspond to prevent appliance damage.
Consult an electrician if in doubt.

For safety reasons, the cooktop may only be used when it has been fully installed into the countertop.

To guarantee the electrical safety of this appliance, continuity must exist between the appliance and an effective grounding system. It is imperative that this basic safety requirement be met. If there is any doubt, have the electrical system of the house checked by a qualified electrician.
Installation, repair and maintenance work should only be performed by a Miele-authorized qualified electrician in compliance with local regulations and the ANSI National Electrical Code / NFPA 70 in the United States or the Canadian Electrical Code, Part I in Canada (CSA standard C22.1).

Installer:

- Please leave these instructions with the customer.

Connection

- Ensure that the connection data on the data plate (voltage, frequency, and fuse rating) match those of your electrical supply.

The data plate is located underneath the cooktop.

The cooktop is approved and ready for connection to a grounded connector with three connecting wires, sheathed by a flexible metal hose.
It must be connected to an assigned line in an approved connecting socket.

The appliance must be able to be disconnected from the power supply on all poles by disconnecting devices! (When turned off, a contact distance of at least $^1/_8$" (3 mm must be present!) The disconnecting devices are overcurrent protection elements and protective circuit breakers.

Black:	Connect to L1 (hot)
Red:	Connect to L2 (hot)
Green:	Connect to GND (ground)

208/240 V, 60 Hz, 40 A

Make sure that the connecting socket is accessible after the installation of the cooktop.

Further information can be found on the included data plate.

⚠ **WARNING:**
THIS COOKTOP MUST BE GROUNDED

Disposal of the packing material

The cardboard box and packing materials protect the appliance during shipping. They have been designed to be biodegradable and recyclable.

Ensure that any plastic wrappings, bags, etc. are disposed of safely and kept out of the reach of children. Danger of suffocation!

Disposal of your old appliance

Old electrical and electronic appliances often still contain valuable materials. However, they also contain harmful substances that were essential for the proper functioning and safe use of the equipment. Handling these materials improperly or disposing of them in your household waste can be harmful to your health and the environment. Therefore, please do not dispose of your old appliance with regular household waste.

Old appliances may contain materials that can be recycled. Please contact your local recycling authority about the possibility of recycling these materials.

Please be sure that your old appliance does not pose a danger to children while being stored for disposal.

After sales service

In the event of a fault which you cannot easily correct yourself, please contact:

– your Miele dealer, or

– the Miele Technical Service Department.

See back cover for contact details.

Please quote the model and serial number of your appliance when contacting Miele.

Data plate

Adhere the extra data plate supplied with the appliance here. Ensure that the model number is the same as the one on the back of these operating instructions.

Warranty

For further information, please refer to your warranty booklet.

MieleCare

This service is available in USA only.

MieleCare, our Extended Service Contract program, gives you the assurance of knowing that your appliance investment is covered by 5 years of worry free ownership.
MieleCare is the only Extended Service Contract in the industry that guarantees repairs by a Miele Authorized Service Provider using genuine Miele parts. Only genuine Miele parts installed by factory trained professionals can guarantee the safety, reliability, and longevity of your Miele appliance.

Please note that unless expressly approved in writing by Miele's Service department, Extended Service Contracts offered by other providers for Miele products will not be recognized by Miele. Our goal is to prevent unauthorized (and untrained) service personnel from working on your Miele products, possibly doing further damage to them, you and/or your home.

To learn more about **MieleCare** Extended Service Contracts, please contact your appliance dealer or visit us online at:
www.mieleusa.com/mielecare

Please have the model and serial number of your appliance available before contacting Technical Service.

Miele

U.S.A.

Miele, Inc.

National Headquarters
9 Independence Way
Princeton, NJ 08540
Phone: 800-843-7231
Fax: 609-419-4298
www.mieleusa.com

Technical Service & Support Nationwide
Phone: 800-999-1360
Fax: 888-586-8056
TechnicalService@mieleusa.com

Canada

Importer
Miele Limited

Headquarters and Miele Centre
161 Four Valley Drive
Vaughan, ON L4K 4V8
www.miele.ca

Customer Care Centre
Phone: 800-565-6435
905-532-2272
customercare@miele.ca

Germany
Manufacturer
Miele & Cie. KG
Carl-Miele-Straße 29
33332 Gütersloh

Miele

KM 6320

CE

en-US

M.-Nr. 09 888 600 / 01