G 7966 SCVi

24” Fully Integrated Dishwasher K2o

Features:

- AutoDos - an integrated automatic detergent dispensing system
- M Touch Vi Controls - an intuitive touch display
- QuickIntenseWash - a full wash and dry cycle in 58 minutes
- 40 dBa (38 dBa when using ExtraQuiet)
- 3D MultiFlex Cutlery Tray
- Panel-Ready
- WifiConn@ct
- Knock2Open
- Water Softener
- EnergyStar

MATERIAL #
11388300

SPECIFICATIONS	
Overall Unit Dimensions	23 9/16” (598 mm) W x 33 11/16” - 36 1/4” (855 -920 mm) H x 22 7/16” (570 mm) D [Depth does not include door panel]
Niche	
Minimum Cabinet Niche Opening	23 5/8” (600 mm) W x 33 3/4” (857 mm) H x 22 7/16” (570 mm) D
Plumbing	
Water Supply Requirements	• Cold or Hot (max 150°F/65°C) water connection • Male 3/8” compression fitting • Water pressure range 7.25 psi (0.5 bar) and 145 psi (10 bar)
Water Connection Line (Supplied)	Length: 5 ft (1.5 m) Female 3/8” compression.
Drain Hose (Supplied)	Length: 5 ft (1.5 m) 7/8” (22 mm) internal diameter
Electrical	
Electrical Requirements	110V / 120V, 60Hz, 15 Amps
Power Cord (Convertible to hardwire)	NEMA 5-15 plug, 5 ft (1.52 m)
Shipping	
Shipping Weight	121 lbs (55 kg)
Shipping Dimensions	27 1/8” W x 38 1/8” H x 26 3/8” D

PRODUCT DIMENSIONS

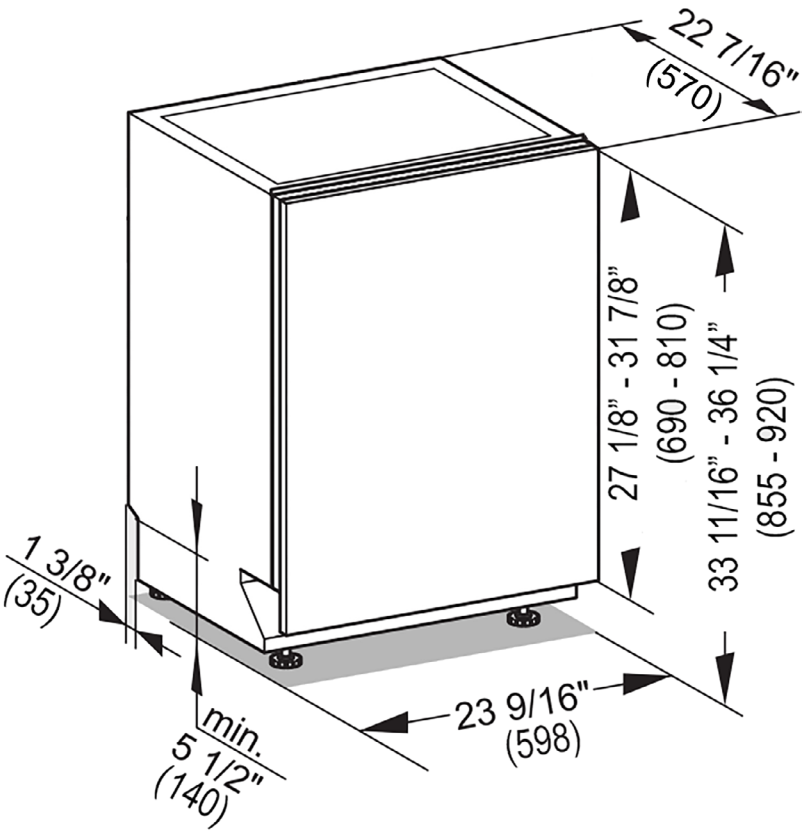

Miele

CUTOUT DIMENSIONS

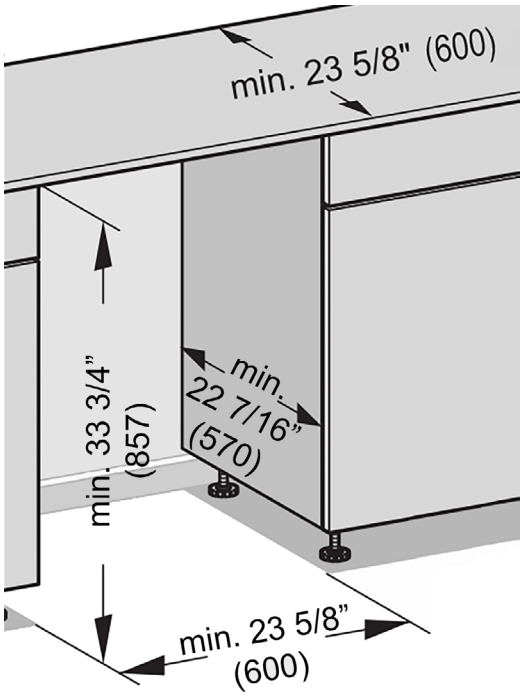

CUSTOM PANEL

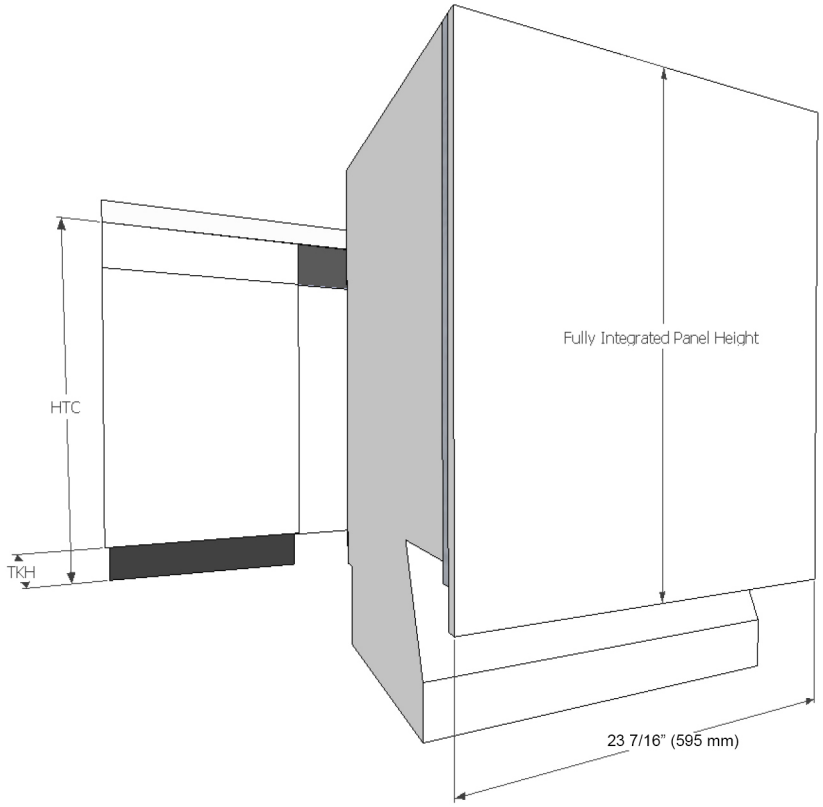

Width: 23 7/16" (595 mm) in all Cases
Thickness: 3/4" (19 mm) in all Cases
Height: Determined using the following calculation:

Panel Height = HTC – TKH

HTC = Height to the underside of countertop
TKH = Toe kick height

Note: Control panel is along the top edge of the unit. It is not visible when the unit is closed. A handle MUST be located on front of panel in order to open unit. (Except K2o models).

Maximum panel height: 31 7/8" (810 mm)

Minimum panel height: 27 1/8" (690 mm)

Maximum panel weight: 24 lbs (11 kg)